LUMASOL

DOUBLE POST

ZAM STEEL GROUND MOUNT SET

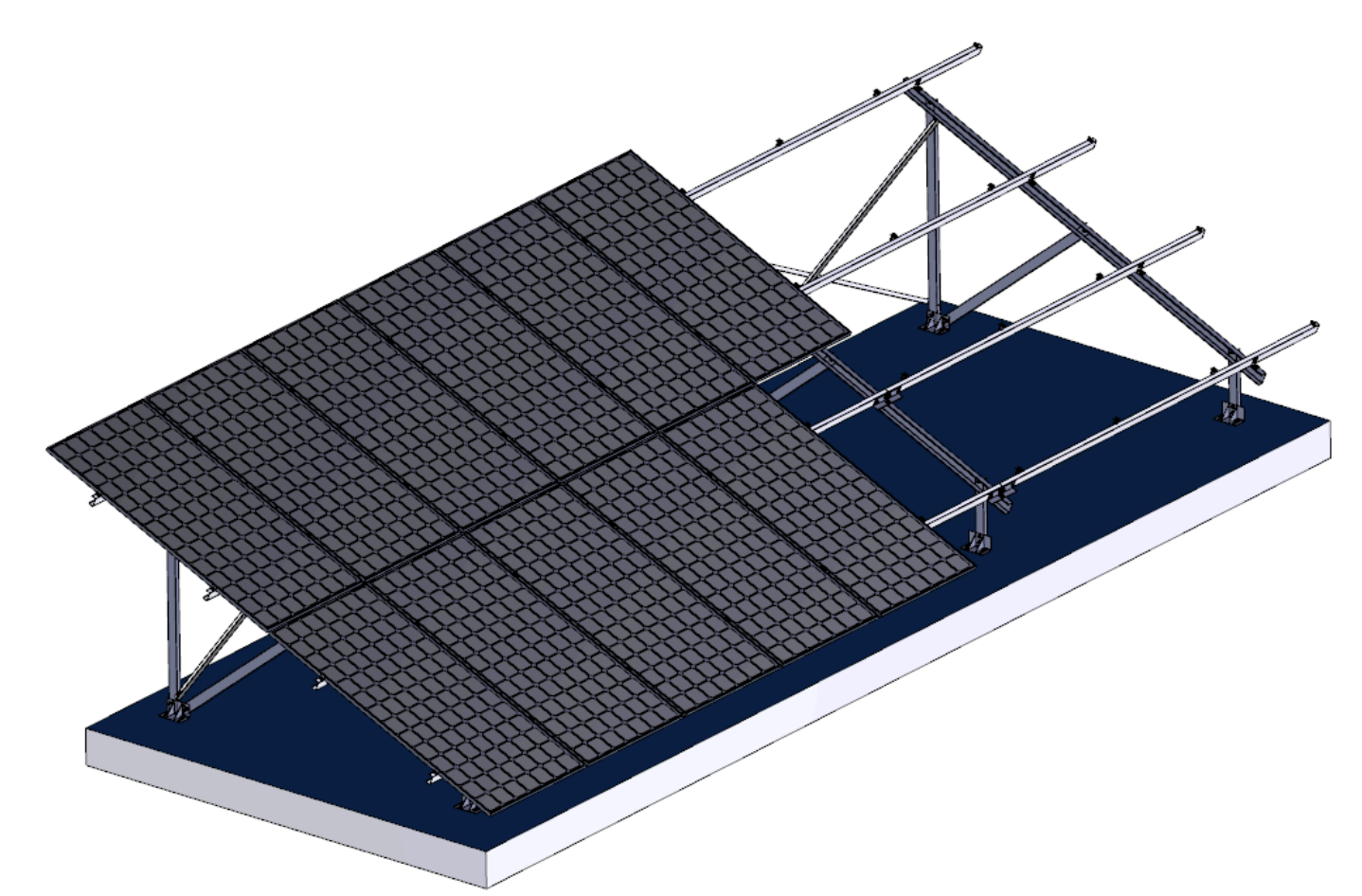

PRODUCT SPEC SHEET

LMS-GM-ZAM-SET

Technical Specifications

Structure Type: **Double Post**
Foundation Type: **Ground Screw or Concrete Block**
Module Compatibility: **Adaptable to different panel sizes**
Rail Fixing: **Pre-drilled holes**
Corrosion Resistance: **Up to Class 3**

Material Specs:

Main Structure: **Q355 Carbon Steel, 275g ZAM Coated**
Base, Rail Clamp & Splice: **Q235 Steel, 65µm HDG**
Panel Clamps & Grounding Lug: **AL6005-T5 (Aluminium)**
Fasteners: **SUS 304 (Stainless Steel)**

Warranty: Up to **20 Years**

> Tilt angle, span and wind load capacity are confirmed per project. Contact Lumasol for a layout to suit your site.

Key Features

- A cost-effective steel solution for ground-mounted PV installations.
- Pre-drilled holes for quick rail fixing, adaptable to panels of different sizes.
- 275g ZAM (zinc-aluminium-magnesium) coated Q355 steel, providing up to Class 3 corrosion resistance and long-term durability.
- Flexible foundation options: ground screws or concrete blocks.
- Minimal component count and a high degree of pre-assembly for faster, more efficient installation.
- Double post frame with supporting arms and back reinforced bars for added structural stability.
- AL6005-T5 mid and end clamps with SUS 304 stainless steel fasteners.
- Grounding lugs and earthing clips for secure electrical continuity.
- Backed by a warranty of up to 20 years.

Components

BEAM

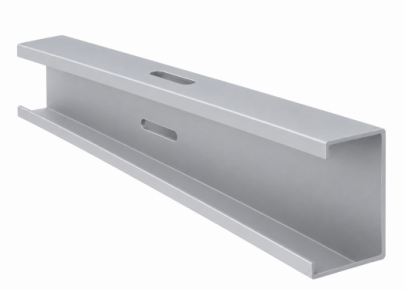

Supports the rail and carries the most load in the structure.

POST



Supports the beam. The main load-bearing member of the system.

RAIL & SUPPORTING ARM

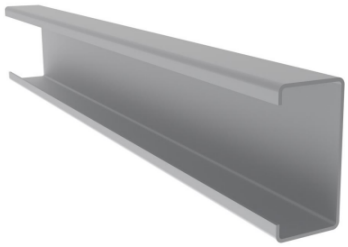

Supports the PV panels.

MID CLAMP



Fixes the panels between modules.

RAIL CLAMP



Fixes the rail onto the beam.

RAIL SPLICE

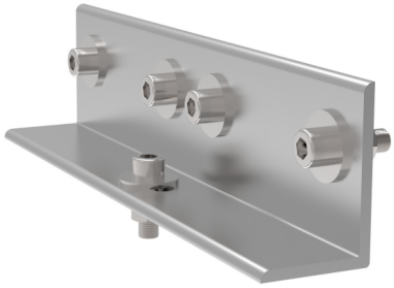

Connects two rails end to end.

END CLAMP

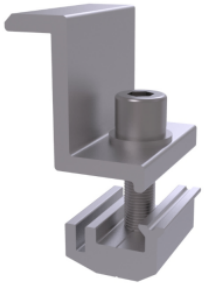

Fixes the panels at the end of each row.

BASE

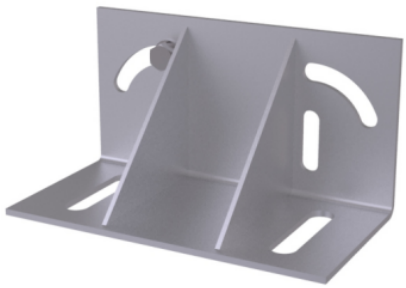

Fixes the posts to the foundation.

BACK REINFORCED BAR

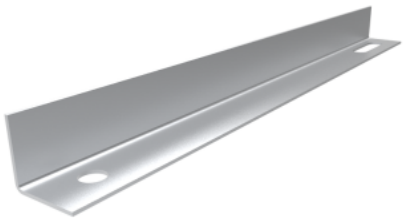

Strengthens the stability of the structure.

Material Specification

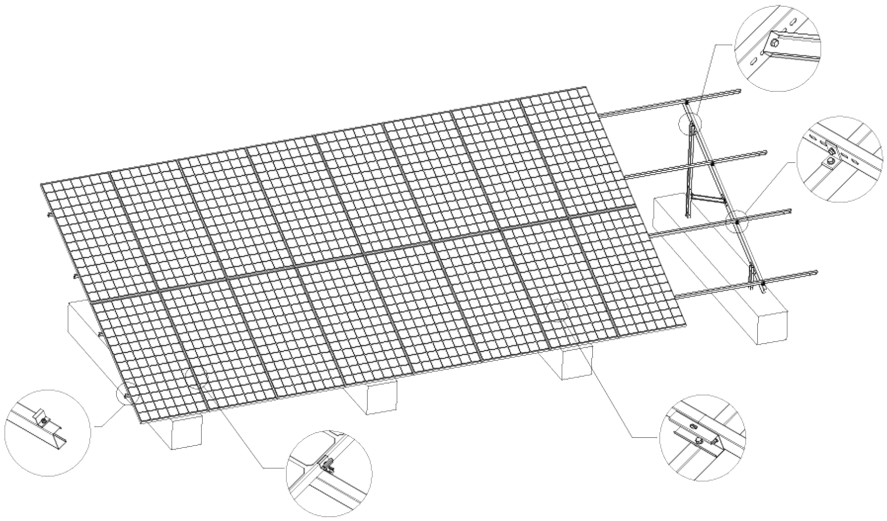

COMPONENT	MATERIAL
Beam	275g ZAM coated Q355 carbon steel
Post	275g ZAM coated Q355 carbon steel
Supporting Arm	275g ZAM coated Q355 carbon steel
Rail	275g ZAM coated Q355 carbon steel
Back Reinforced Bar	275g ZAM coated Q355 carbon steel
Base	Q235 HDG 65μm / SUS 304
Rail Clamp	Q235 HDG 65μm / SUS 304
Rail Splice	Q235 HDG 65μm / SUS 304
Mid Clamp	AL6005-T5 / SUS 304
End Clamp	AL6005-T5 / SUS 304
Grounding Lug	AL6005-T5 / SUS 304
Bolt Sets	SUS 304
Earthing Clip	SUS 304

ZAM: zinc-aluminium-magnesium coating. HDG: hot-dip galvanised. SUS 304: stainless steel fasteners.

Connection Details



BEAM & POST



BEAM & SUPPORTING ARM

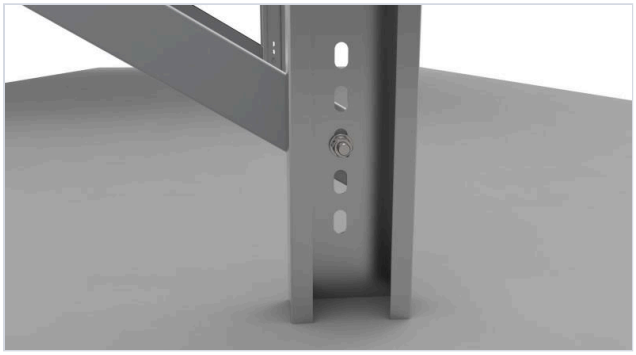

POST & SUPPORTING ARM

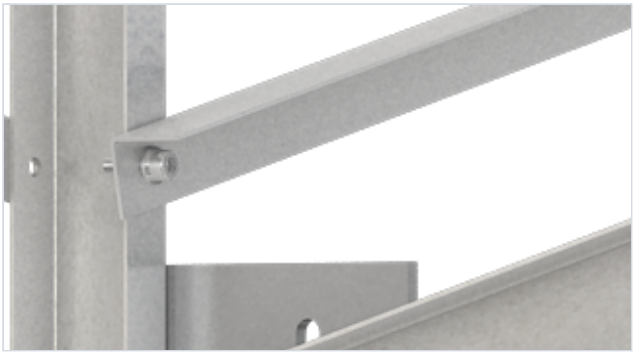

BASE & POSTS

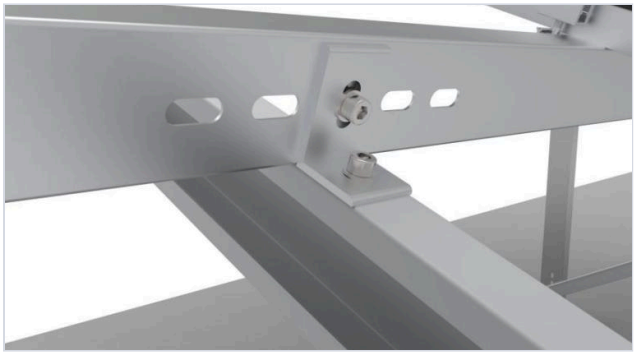

RAIL CLAMP, RAIL & BEAM



RAIL SPLICE & BEAM

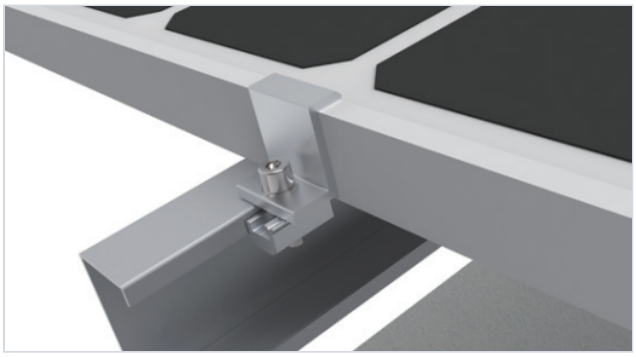

END CLAMP

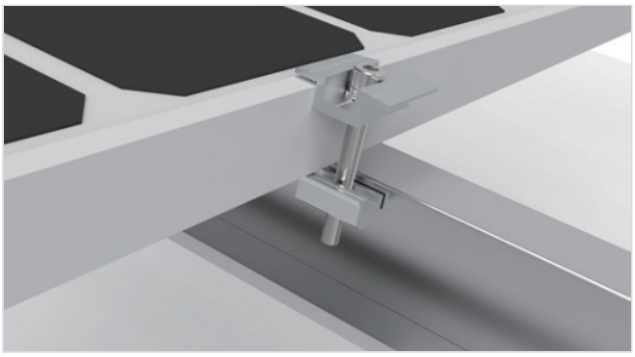

MID CLAMP

LUMASOL

SOLAR MOUNTING STRUCTURES



LUMASOL (PTY) LTD
WWW.LUMASOL.CO.ZA | SALES@LUMASOL.CO.ZA
060 587 4302 | 073 274 2356